(19) Europäisches Patentamt
European Patent Office
Office européen des brevets

(11) EP 2 885 463 B1

(12) **EUROPEAN PATENT SPECIFICATION**

(45) Date of publication and mention of the grant of the patent:
13.06.2018 Bulletin 2018/24

(21) Application number: **13808589.9**

(22) Date of filing: **27.06.2013**

(51) Int Cl.:
E01F 15/08 *(2006.01)*

(86) International application number:
PCT/US2013/048286

(87) International publication number:
WO 2014/004892 (03.01.2014 Gazette 2014/01)

(54) **PRECAST TRAFFIC BARRIER ATOP RETAINING WALL SYSTEM**

VORGEFERTIGTE VERKEHRSSCHRANKE AUF STÜTZWANDSYSTEM

GLISSIÈRE DE SÉCURITÉ PRÉMOULÉE AU-DESSUS D'UN SYSTÈME DE MUR DE SOUTÈNEMENT

(84) Designated Contracting States:
AL AT BE BG CH CY CZ DE DK EE ES FI FR GB GR HR HU IE IS IT LI LT LU LV MC MK MT NL NO PL PT RO RS SE SI SK SM TR

(30) Priority: **28.06.2012 US 201261665545 P**

(43) Date of publication of application:
24.06.2015 Bulletin 2015/26

(73) Proprietor: **Earth Wall Products LLC**
Marietta, GA 30064 (US)

(72) Inventor: **RAINEY, Thomas, L.**
Marietta, GA 30064 (US)

(74) Representative: **Williams Powell**
11 Staple Inn
London WC1V 7QH (GB)

(56) References cited:

US-A- 3 195 312	**US-A- 4 059 362**
US-A- 4 494 892	**US-A- 5 131 786**
US-A- 5 471 811	**US-A- 5 492 438**
US-A1- 2011 318 100	**US-A1- 2011 318 100**
US-B2- 7 073 984	**US-B2- 7 845 885**

- **'Median Barrier Wall for Superelevated Sections or for Variable Roadway Profile Grades.' FDOT DESIGN STANDARDS 01 January 2011, page 1, XP055184512**

EP 2 885 463 B1

Printed by Jouve, 75001 PARIS (FR)

Description

BACKGROUND

CROSS REFERENCE TO RELATED APPLICATIONS

[0001] US 2011/318100 relates to a precast retaining wall block configured for assembly into a retaining wall. US7,073,984 relates to a precast retaining wall element for retaining a soil mass in a railway installation.

[0002] Conventional concrete earth retaining walls are commonly used for architectural, site development and roadway/highway construction applications. When roadways are located above or rest on top of the completed earth retaining wall, a traffic barrier is required to prevent vehicles from falling off of the retaining wall. Therefore, a traffic barrier is required to contain the impact from vehicles to keep them from falling over the retaining wall. The objective of the current invention is to minimize the concrete required for this purpose of using an exemplary shaped counterweight stem to capture more of the soil backfill weight located behind the earth retaining wall above the stem location to act as a counterweight and prevent barrier movement.

[0003] This objective is reached by a precast traffic barrier according to claim 1.

BRIEF DESCRIPTION OF THE DRAWINGS

[0004] Many aspects of the invention can be better understood with reference to the following drawings. The components in the drawings are not necessarily to scale, emphasis instead being placed upon clearly illustrating the principles of the present invention. Moreover, in the drawings, like reference numerals designate corresponding parts throughout the several views.

Figure 1 is a view of the exemplary precast traffic barrier in accordance various embodiments of the disclosure;

Figure 2 is a cross sectional view of an earth retaining wall with the exemplary precast traffic barrier sitting on top of an earth retaining wall in accordance various embodiments of the disclosure;

Figure 3 is an elevation view of an earth retaining wall with the exemplary precast traffic barrier making up the top row of precast concrete units in accordance various embodiments of the disclosure;

Figure 4 is a side view of the exemplary precast traffic barrier in accordance various embodiments of the disclosure;

Figure 5 is a top view of the exemplary precast traffic barrier in accordance various embodiments of the disclosure;

Figure 6 is a back view of the exemplary precast traffic barrier in accordance various embodiments of the disclosure.

DETAILED DESCRIPTION

[0005] Disclosed herein are different views of the exemplary precast traffic barrier related to the siting above an earth retaining wall to prevent traffic from falling over the earth retaining wall. Reference will now be made in detail to the description of the embodiments as illustrated in the drawings. Like reference numbers indicate like parts throughout the several views.

[0006] When roadways, driveways, or vehicle access is planned above an underlying earth retaining wall, a traffic barrier to prevent traffic from falling over the walls leading edge is required. Traditionally, a guard rail or poured in place concrete traffic barrier is installed above the underlying earth retaining wall to contain vehicles traveling on the planned drive isle or roadway above the underlying earth retaining wall. The exemplary invention is to expedite installation of the traffic barrier by making it a part of the earth retaining wall system where the traffic barriers can act as the top row of the modular precast retaining wall system and provide resistance to overturning by using the backfill soil weight resting on the horizontal cantilever triangular stem. The downward pressure of the soil backfill beside and on top of the horizontal protruding stem provides the resisting pressure to have the exemplary precast traffic barrier act as a cantilever foundation with a vertical wall and resist impact loads from vehicles impacting the portion of the precast traffic barrier extending above grade.

[0007] Generally speaking, the portion of the precast traffic barrier extending above grade has a geometry and dimension defined by various state Department of Transportations that are standard or uniform throughout all traffic barriers installed along roadways, highways, and planned drive isles of the respective states. Therefore, the geometry of the vertical portion of the precast traffic barrier that extends above the roadway grade may vary from state to state.

[0008] Referring to Figure 1, the horizontal cantilever triangular stem 105 of the exemplary precast traffic barrier 100 has a front portion 115, a horizontal stem 190, and an alignment seat 165. The front portion 115 has an above-grade front surface 130, a below-grade front surface 120, a top surface 140, a rear surface 180, and a slanted portion 150. The above-grade front surface 130 extends vertically above roadway grade and the below-grade front surface 120 extends vertically below roadway grade. The below-grade front surface 120 comprises the upper portion of the underlying earth retaining wall. The top surface 140 of the front portion 115 is typically 32 to 36 inches above the roadway or driveway surface elevation. The rear surface 180 of the front portion 115 extends above grade. Vehicular impact would occur against the rear surface 180 as well as the slanted portion 150. The overall stability of the exemplary precast traffic barrier 100 is prevented from overturning by a counterweight from backfill soil resting beside and above the horizontal stem 190. A protrusion 110 of the rear stem helps capture

the surrounding backfill soils weight to add resisting force by means of downward weight on the horizontal stem 190. The vertical center portion 160 of the horizontal stem 190 is approximately 76 cm (30 inches) below the drive or roadway grade to allow the installation of utilities and pavement section not obscured by the precast traffic barrier 100 piece or unit. To keep the exemplary precast traffic barrier from sliding on top of the retaining wall, an alignment seat 165 comprising aligning elements 170 extend below the exemplary precast traffic barrier 100 to lock into the top concrete precast unit of the earth retaining wall. The aligning elements 170 may comprise, for example, two protruding lugs.

[0009] Figure 2 shows a cross section 200 of the elevated roadway grade 220 sitting on top of the earth retaining wall. The horizontal stem 190 of the exemplary precast traffic barrier 100 sits well below the pavement grade 220 to prevent interference. For installation of the exemplary precast traffic barrier 100, a square hole 240 is cast into the exemplary precast traffic barrier 100 to facilitate lifting and hoisting into place. A diagonal portion 210 is required to transfer the downward cantilever pressure on the horizontal stem 190 to the front portion 115 of the exemplary precast traffic barrier 100 to prevent impact on the rear surface 180 of the barrier-facing vehicular traffic. The exemplary precast traffic barrier 100 is aligned with the underlying earth retaining wall by the alignment seat 165, which is engaged to a top portion of the underlying earth retaining wall.

[0010] Figure 3 shows an elevation view 300 of the front face of the earth retaining wall, the exemplary precast traffic barrier 100 makes up the top row of the concrete earth retaining wall to complete or top out the earth retaining wall soil retention requirements. The grade of the proposed roadway 220 is below the barrier portion of the precast traffic barrier 100 but above the horizontal cantilever triangular stem 105 of the precast traffic barrier 100.

[0011] In Figure 4, the exemplary precast traffic barrier 100 is shown. The aligning elements 170 extend below the bottom of the horizontal stem 190 to lock into the earth retaining wall system below. The aligning elements 170 extend downwardly from the bottom surface 185 of the protrusion 110 of the horizontal stem 190 and rearward along the protrusion 110 of the horizontal stem 190. The below-grade front surface 120 of the precast traffic barrier 100 is in vertical alignment with the underlying retaining wall face and the front face 175 of the aligning element 170 to complete the earth retaining wall vertical plane alignment. For example, the aligning elements 170 may be aligned in a parallel fashion with the rear surface 180 of the front portion 115.

[0012] Figure 5 shows the top view to illustrate the triangular protrusions 110 of the horizontal stem 190 that cover approximately 50% of the overall counterweight area of backfill soil that is available to provide weight for overturning resistance. The triangular protrusions 110 allow the reduced horizontal coverage area and hence save precast concrete area and volume. The triangular protrusions 110 extend outwardly from the bottom side 195 of the vertical center portion 160 of the horizontal stem 190. The diagonal portion 210 connects the rear surface 180 with the vertical center portion 160 of the horizontal stem 190.

[0013] Figure 6 is a rear view of the exemplary precast traffic barrier 100 which shows the diagonal portion 210 connecting the vertical center portion 160 of the horizontal stem 190 up to the vertical rear surface 180 of the front portion 115 of the precast traffic barrier 100.

[0014] It should be emphasized that the above described invention of the present disclosure is to implement an arching effect within the earth retaining wall backfill soils by the triangular stem to take advantage of the soil backfill vertical weight to provide resisting force from horizontal vehicular impact on the portion of the stem above the drive isle or roadway grade. The dimensions of the portion of the barrier above grade may vary depending upon various Department of Transportation guidelines for impact barriers along roadways.

[0015] It should be emphasized that the above-described embodiments of the present invention, particularly, any "preferred" embodiments, are merely possible non-limiting examples of implementations, merely set forth for a clear understanding of the principles of the invention. Many variations and modifications may be made to the above-described embodiment(s) of the invention without departing from the scope of the claims.

Claims

1. A precast traffic barrier configured for assembly on a top portion of an underlying concrete earth retaining wall, comprising a cantilever triangular stem, the cantilever triangular stem comprising:

    a front portion (115) comprising a front surface (120,130), a rear surface (180), a top surface (140), and a bottom surface;
    a horizontal stem (190) extending outwardly from the rear surface of the front portion, the horizontal stem comprising at least a vertical center portion (160), a left protrusion (110) and a right protrusion (110); a diagonal portion (210) connecting the rear surface of the front portion to the horizontal stem (190); an alignment seat (165) extending along at least a portion of the horizontal stem (190), wherein:

        the left protrusion (110) extends outwardly from a bottom left side of the vertical center portion of the stem (190);
        the right protrusion (110) extends outwardly from a bottom right side of the vertical center portion of the stem (190);
        the left protrusion is triangular to the right

protrusion;
the diagonal portion (210) extends directly above the vertical center portion (160) in a vertical plane defined by the vertical center portion (160) and the alignment seat is, in installed condition of the precast traffic barrier, connected to at least:

the top portion of the underlying earth retaining wall;
the rear surface of the front portion;
a bottom face of the left protrusion; and
a bottom face of the right protrusion;
characterized in that the front portion further comprises a slanted portion (150) at its rear surface (180) configured for vehicular impact when the barrier is installed.

2. The precast traffic barrier of claim 1, wherein, when the barrier is instaled, a portion of the front surface (120), the stem (190) and the diagonal portion (210) are below grade.

3. The precast traffic barrier of claim 1, wherein the alignment seat (165) comprises at least a left lug aligned with the rear surface of the front portion and a right lug aligned with the rear surface of the front portion.

4. The precast traffic barrier of claim 1, wherein the vertical center portion of the stem is at least 76 cm (30 inches) below a roadway when the barrier is installed.

Patentansprüche

1. Vorgefertigte Verkehrsbarriere, die zum Zusammenbau auf einem oberen Abschnitt einer darunterliegenden Betonerdstützwand konfiguriert ist, umfassend einen dreieckigen, vorspringenden Trägerschaft, wobei der dreieckige, vorspringende Trägerschaft umfasst:

einen vorderen Abschnitt (115) umfassend eine vordere Oberfläche (120, 130), eine hintere Oberfläche (180), eine obere Oberfläche (140), und eine untere Oberfläche;
einen horizontalen Schaft (190), der sich von der hinteren Oberfläche des vorderen Abschnittes nach außen erstreckt, wobei der horizontale Schaft zumindest einen vertikalen mittleren Abschnitt (160), einen linken Vorsprung (110) und einen rechten Vorsprung (110) umfasst; einen diagonalen Abschnitt (210), der die hintere Oberfläche des vorderen Abschnittes mit dem horizontalen Schaft (190) verbindet; einen Ausrichtungssitz (165), der sich entlang zumindest einem Abschnitt des horizontalen Schaftes (190) erstreckt,
wobei:

der linke Vorsprung (110) sich von einer unteren linken Seite des vertikalen mittleren Abschnittes des Schaftes (190) aus nach außen erstreckt;
der rechte Vorsprung (110) sich von einer unteren rechten Seite des vertikalen mittleren Abschnittes des Schaftes (190) aus nach außen erstreckt;
der linke Vorsprung dreieckig zu dem rechten Vorsprung ist;
der diagonale Abschnitt (210) sich direkt oberhalb des vertikalen mittleren Abschnittes (160) in einer vertikalen Ebene erstreckt, die durch den vertikalen mittleren Abschnitt (160) definiert ist und
der Ausrichtungssitz in dem installierten Zustand der vorgefertigten Verkehrsbarriere zumindest verbunden ist mit:

dem oberen Abschnitt der darunterliegenden Betonerdstützwand;
der hinteren Oberfläche des vorderen Abschnittes;
eine unteren Seite des linken Vorsprungs; und
einer unteren Seite des rechten Vorsprungs;
dadurch gekennzeichnet, dass der vordere Abschnitt weiterhin umfasst einen geneigten Abschnitt (150) an dessen hinteren Oberfläche (180), die für Fahrzeugaufprall konfiguriert ist, wenn die Barriere installiert ist.

2. Vorgefertigte Verkehrsbarriere von Anspruch 1, wobei, wenn die Barriere installiert ist, ein Abschnitt der vorderen Oberfläche (120), der Schaft (190) und der diagonale Abschnitt (210) unterirdisch sind.

3. Vorgefertigte Verkehrsbarriere nach Anspruch 1, wobei der Ausrichtungssitz (165) zumindest eine linke Nase, die mit der hinteren Oberfläche von dem vorderen Abschnitt ausgerichtet ist und eine rechte Nase, die mit der hinteren Oberfläche des vorderen Abschnitts ausgerichtet ist, umfasst.

4. Vorgefertigte Verkehrsbarriere nach Anspruch 1, wobei der vertikale mittlere Abschnitt des Schaftes zumindest 76cm (30 inch) unterhalb der Straße liegt, wenn die Barriere installiert ist.

Revendications

1. Glissière de sécurité prémoulée configurée pour être assemblée sur une partie supérieure d'un mur de soutènement en béton sous-jacent comprenant une barre triangulaire en porte-à-faux, la barre triangulaire en porte-à-faux comprenant :

   une partie avant (115) comprenant une surface avant (120, 130), une surface arrière (180), une surface supérieure (140) et une surface inférieure ;
   une barre horizontale (190) s'étendant vers l'extérieur à partir de la surface arrière de la partie avant, la barre horizontale comprenant au moins une partie centrale verticale (160), une protubérance gauche (110) et une protubérance droite (110) ;
   une partie en diagonale (210) reliant la surface arrière de la partie avant à la barre horizontale (190) ;
   un siège d'alignement (165) s'étendant le long d'au moins une partie de la barre horizontale (190),
   dans laquelle :

      la protubérance gauche (110) s'étend vers l'extérieur à partir d'un côté gauche inférieur de la partie centrale verticale de la barre (190) ;
      la protubérance droite (110) s'étend vers l'extérieur à partir d'un côté droit inférieur de la partie centrale verticale de la barre (190) ;
      la protubérance gauche est triangulaire par rapport à la protubérance droite ;
      la partie en diagonale (210) s'étend directement au-dessus de la partie centrale verticale (160) dans un plan vertical défini par la partie centrale verticale (160), et
      le siège d'alignement est, dans un état installé de la glissière de sécurité prémoulée, relié au moins à :

         la partie supérieure du mur de soutènement sous-jacent ;
         la surface arrière de la partie avant ;
         une face inférieure de la protubérance gauche ; et
         une face inférieure de la protubérance droite ;

   caractérisée par le fait que la partie avant comprend en outre une partie inclinée (150) au niveau de sa surface arrière (180), configurée pour un impact de véhicule lorsque la glissière est installée.

2. Glissière de sécurité prémoulée selon la revendication 1, dans laquelle, lorsque la barrière est installée, une partie de la surface avant (120), la barre (190) et la partie en diagonale (210) se trouvent sous le sol.

3. Glissière de sécurité prémoulée selon la revendication 1, dans laquelle le siège d'alignement (165) comprend au moins un tenon gauche aligné avec la surface arrière de la partie avant et un tenon droit aligné avec la surface arrière de la partie avant.

4. Glissière de sécurité prémoulée selon la revendication 1, dans laquelle la partie centrale verticale de la barre se trouve à au moins 76 cm (30 pouces) au-dessous d'une route lorsque la barrière est installée.

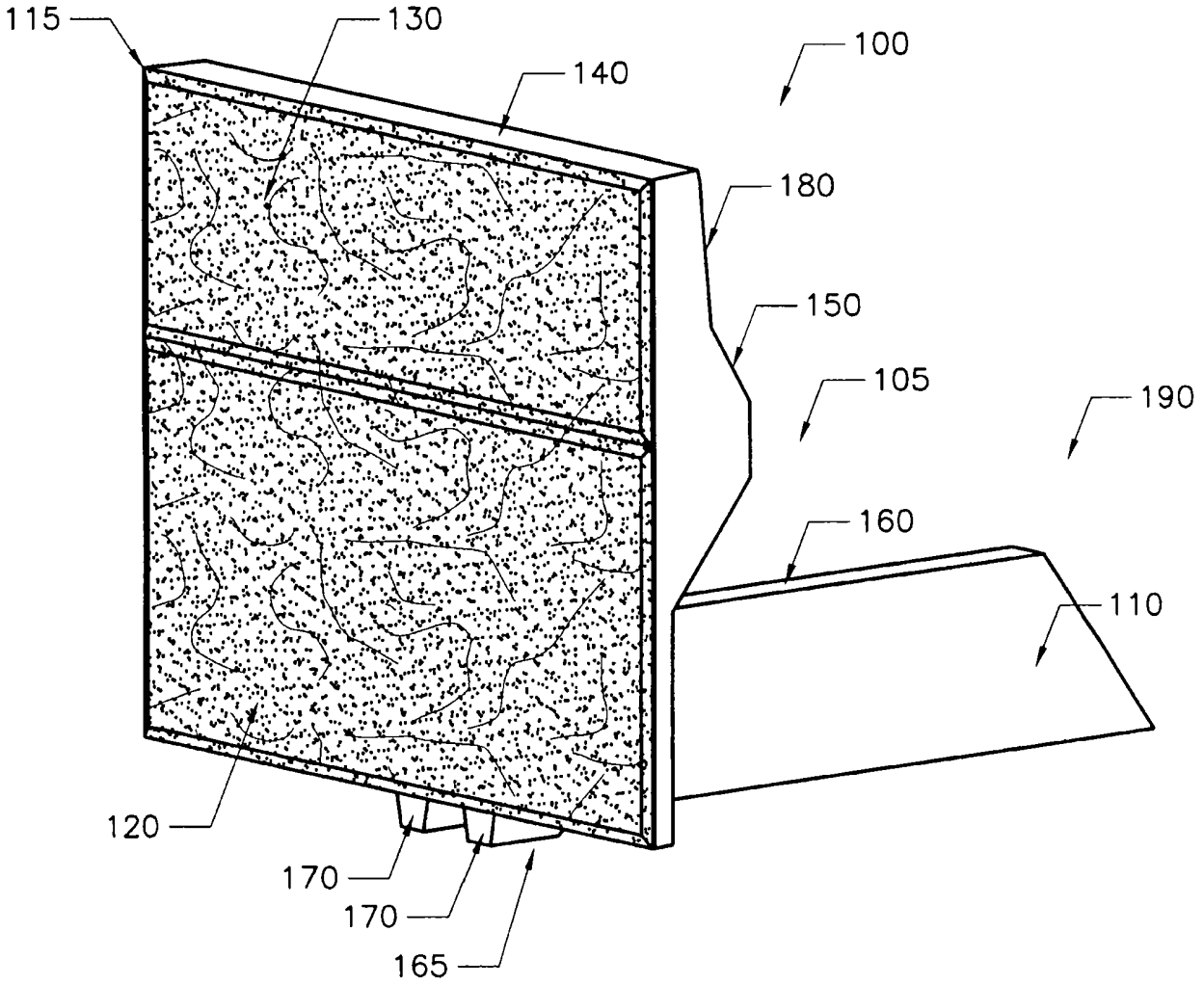

FIGURE 1

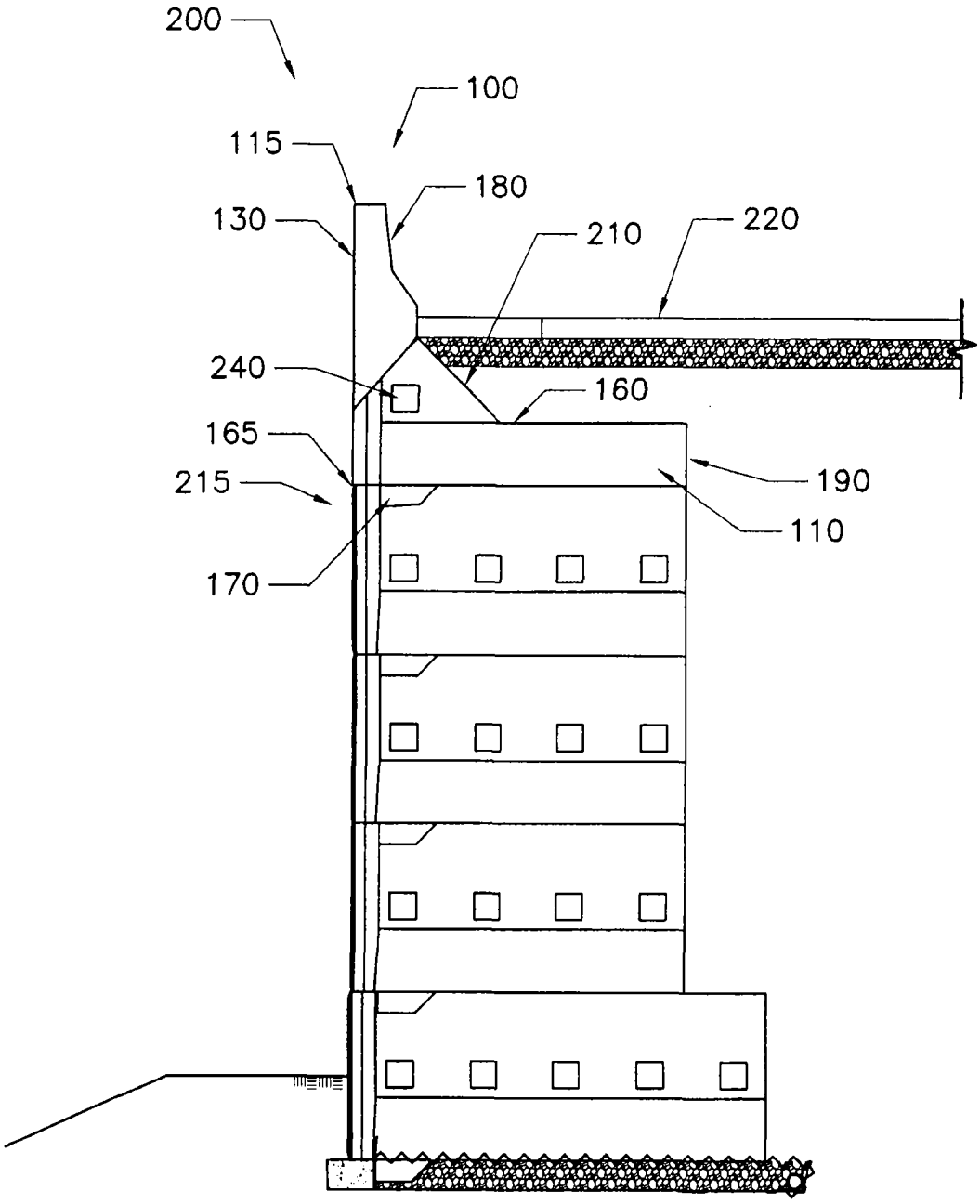

FIGURE 2

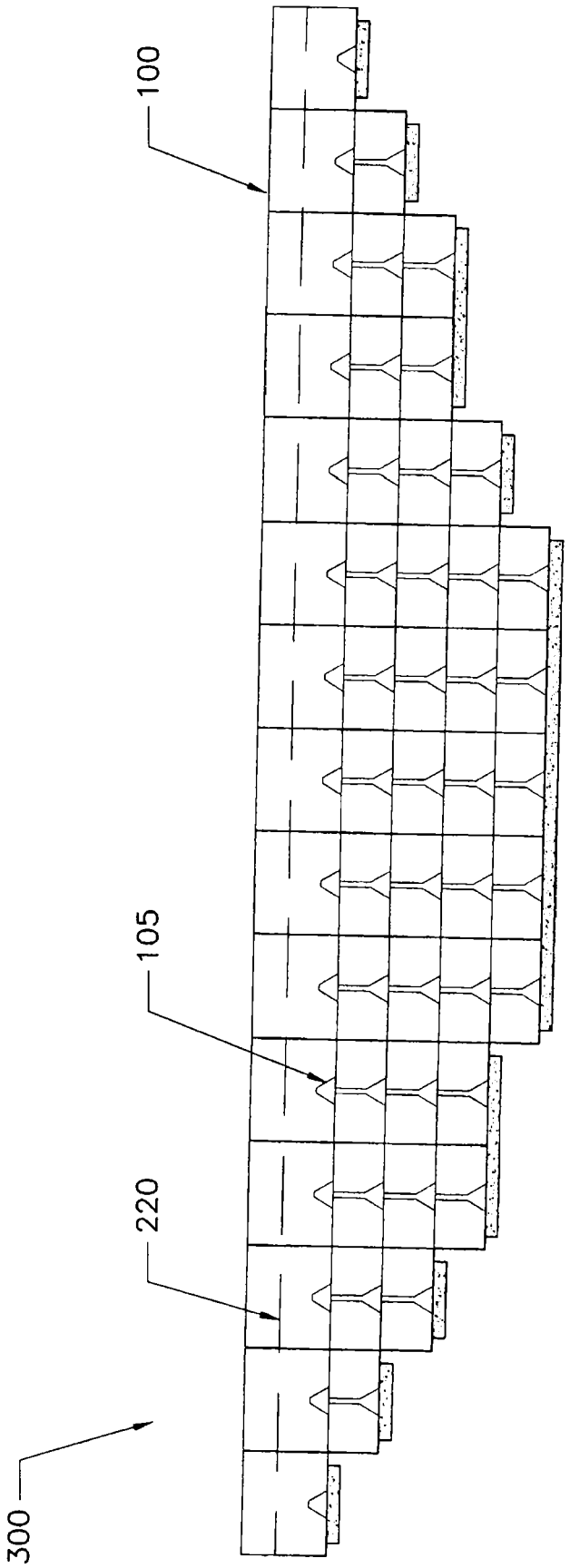

FIGURE 3

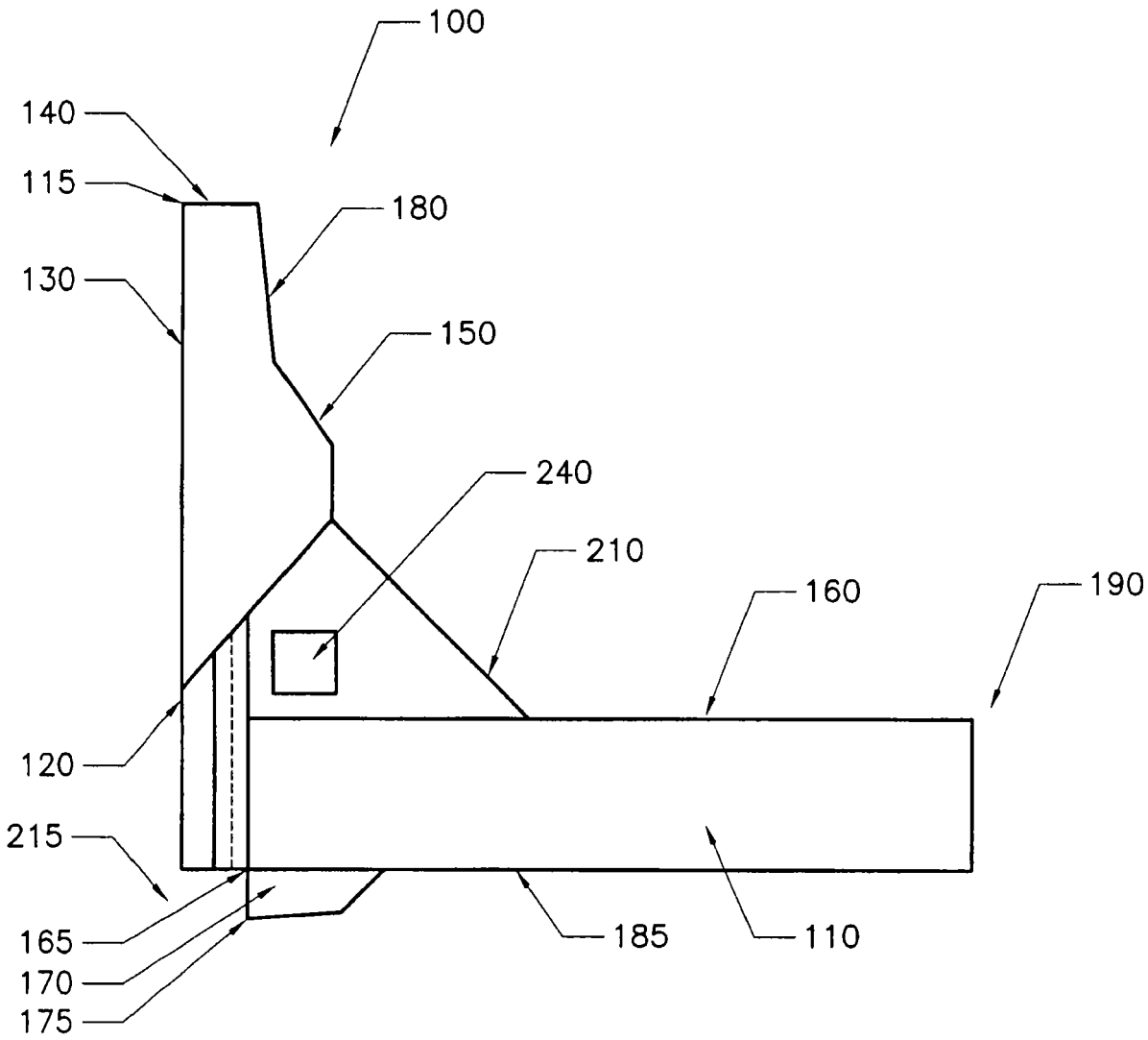
100
140
115
180
130
150
240
210
160
190
120
215
165
170
175
185
110

FIGURE 4

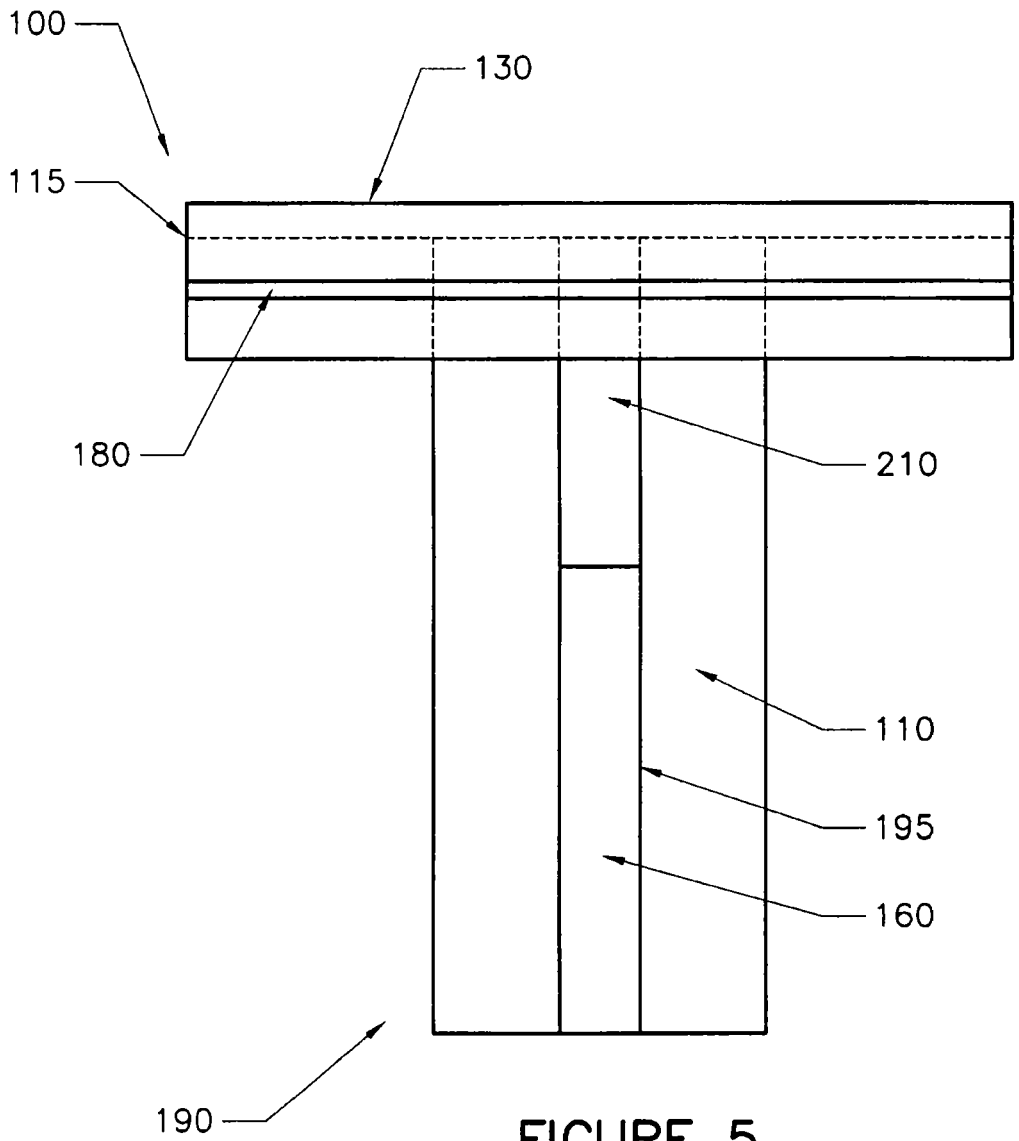

FIGURE 5

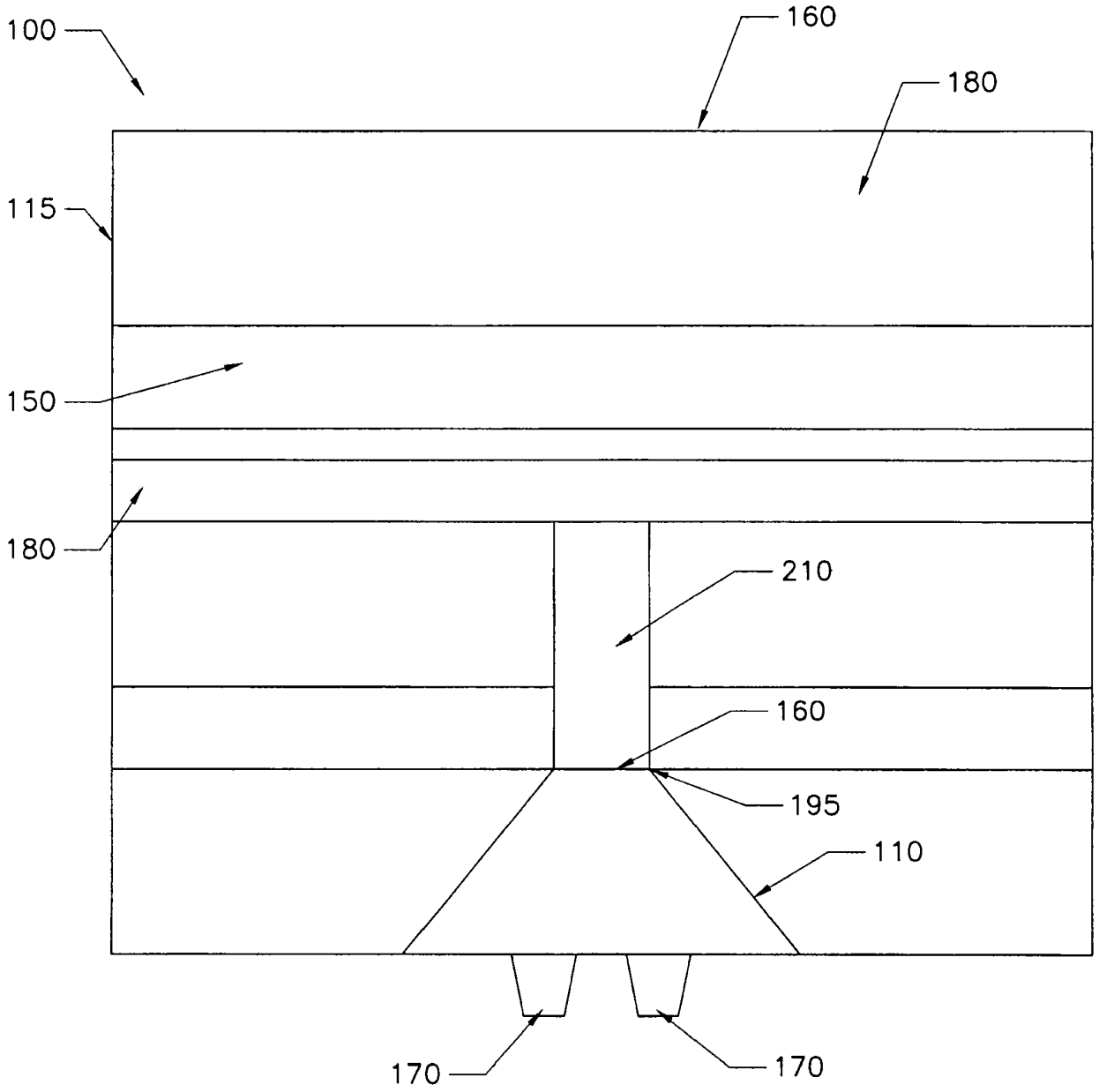

FIGURE 6

REFERENCES CITED IN THE DESCRIPTION

This list of references cited by the applicant is for the reader's convenience only. It does not form part of the European patent document. Even though great care has been taken in compiling the references, errors or omissions cannot be excluded and the EPO disclaims all liability in this regard.

Patent documents cited in the description

- US 2011318100 A **[0001]**
- US 7073984 B **[0001]**